CONTENTS

How to Prepare for the Exam 2
How to Study 2
What to Study 3
Helpful Hints on Taking the Exam 3
Regulations at the Examination Site 4
Typical Examination Questions 5
How to Use This Book 6
Helpful References 8
State Licensing Requirements for Electrical Contractors 13
Maintenance Electrician – Practice Exam #1 15
Maintenance Electrician – Practice Exam #2 23
Residential Electrician – Practice Exam #3 31
Residential Electrician – Practice Exam #4 39
Residential Electrician – Practice Exam #5 47
Residential Electrician – Practice Exam #6 55
Journeyman Electrician – Practice Exam #7 63
Journeyman Electrician – Practice Exam #8 71
Journeyman Electrician – Practice Exam #9 79
Journeyman Electrician – Practice Exam #10 87
Journeyman Electrician – Practice Exam #11 95
Master Electrician – Practice Exam #12 103
Master Electrician – Practice Exam #13 111
Master Electrician – Practice Exam #14 119
Master Electrician – Practice Exam #15 127
Sign Electrician – Practice Exam #16 135
Sign Electrician – Practice Exam #17 143
Residential Electrician – Final Exam 151
Journeyman Electrician – Final Exam 169
Master Electrician – Final Exam 191
Answer Key 213

TYPES OF POWER

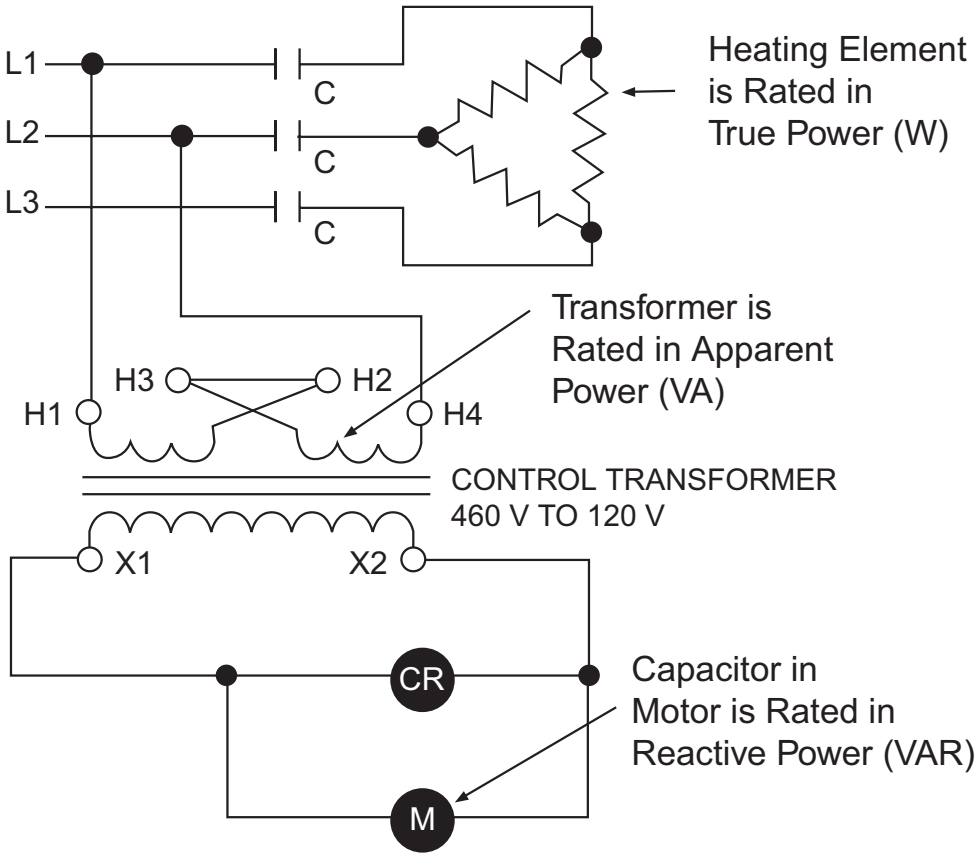

Reactive power is supplied to a reactive load (capacitor/coil) and is measured in volt-amperes reactive (VAR). The capacitor on a motor uses reactive power to keep the capacitor charged. The capacitor uses no true power because it performs no actual work such as producing heat or motion.

In an AC circuit containing only resistance, the power in the circuit is true power. However, almost all AC circuits include capacitive reactance (capacitors) and/or inductive reactance (coils). Inductive reactance is the most common because all motors, transformers, solenoids and coils have inductive reactance.

Apparent power represents a load or circuit that includes both true power and reactive power and is expressed in volt-amperes (VA), kilovolt-amperes (kVA) or megavolt-amperes (MVA). Apparent power is a measure of component or system capacity because apparent power considers circuit current regardless of how it is used. For this reason, transformers are sized in volt-amperes rather than in watts.

Notes

Maintenance Electrician Practice Exam #1

1. The National Electrical Code® (NEC®) is NOT:
   a. designed for future expansion of electrical use.
   b. designed to safeguard people and property from electrical hazards.
   c. published by the NFPA®.
   d. intended as a specification manual for trained persons.

2. The NEC® mandates specific branch-circuits, receptacle outlets, and utilization equipment to be provided with a ground-fault circuit interrupter (GFCI); this device is intended _____.
   a. to prevent overloading the conductors
   b. to prevent overloading the circuit breakers
   c. for the protection of equipment from overloads
   d. for the protection of personnel

3. Electrical wiring installed _____ is considered to be installed in a damp location.
   a. under canopies or roofed open porches
   b. underground
   c. outside
   d. none of these apply

4. When a 20-ampere, 120-volt receptacle outlet is installed, in which of the following listed locations is the receptacle required to have GFCI protection?
   a. in a classroom of an educational facility
   b. in the lobby of a movie theater
   c. under an outdoor canopy, near the entrance of a public library
   d. in the walkway of an indoor retail shopping mall

13. In general, liquidtight flexible metal conduit (LFMC) shall be securely fastened within _____ of each box or other conduit termination.

    a. 4½ feet
    b. 3 feet
    c. 12 inches
    d. 18 inches

14. When a pull box contains conductors of size 4 AWG and larger and a straight pull of the conductors is to be made, the length of the box shall NOT be less than _____ times the trade diameter of the largest conduit entering the box.

    a. six
    b. four
    c. eight
    d. twelve

15. In general, all of the following wiring methods listed are permitted to be used as a feeder for temporary wiring on a construction site EXCEPT _____.

    a. NM cable
    b. NMC cable
    c. type PD cord
    d. type SJO cord

16. Determine the MAXIMUM number of size 14 AWG THHN conductors permitted to be installed in a trade size ⅜ inch flexible metal conduit (FMC) that contains a bare size 14 AWG grounding conductor when the flex has external fittings.

    a. two
    b. three
    c. four
    d. five

Notes

ANSWER		REFERENCE
15.	c	Trade Knowledge Current Formula $100 \times 6 = 600$ watts total $I = P/E$ $I = 600$ watts/120 volts $= 5$ amperes
16.	a	Tbl. 300.5, Note 5
17.	c	314.29
18.	c	314.24(B)
19.	b	312.2
20.	a	210.52(H)
21.	a	210.52(C)(1)
22.	b	Tbl. 300.5, Col. 4
23.	c	334.15(C)
24.	d	310.12(C) 200.6(A)-(E) 250.119
25.	b	404.2(A)